433-IRD-0001

GAMMA-RAY LARGE AREA SPACE TELESCOPE (GLAST) PROJECT

LARGE AREA TELESCOPE (LAT) INSTRUMENT – SPACECRAFT INTERFACE REQUIREMENTS DOCUMENT

April 24, 2002

Revision B

GODDARD SPACE FLIGHT CENTER
GREENBELT, MARYLAND

CHECK THE GLAST PROJECT WEBSITE AT
http://glast.gsfc.nasa.gov/project/cm/mcdl TO VERIFY THAT THIS IS THE CORRECT VERSION PRIOR TO USE.

433-IRD-0001

GAMMA-RAY LARGE AREA SPACE TELESCOPE
(GLAST)
PROJECT

LARGE AREA TELESCOPE (LAT) INSTRUMENT – SPACECRAFT

INTERFACE REQUIREMENTS DOCUMENT (IRD)

April 24, 2002

NASA Goddard Space Flight Center
Greenbelt, Maryland

CHECK THE GLAST PROJECT WEBSITE AT
http://glast.gsfc.nasa.gov/project/cm/mcdl TO VERIFY THAT THIS IS THE CORRECT VERSION PRIOR TO USE.

GLAST PROJECT LAT INSTRUMENT – SPACECRAFT IRD

Prepared by:

Original Signed 04/25/02

Erik Andrews
GLAST FSW Lead

Date

Reviewed by:

Original Signed 04/26/02

Bernard Graf
GLAST LAT Instrument Manager

Date

Original Signed 04/26/02

Joy Bretthauer
GLAST Observatory Manager

Date

Original Signed 04/26/02

Norman Rioux
GLAST Mission Systems Engineer

Date

Concurrence:

Original Signed 04/29/02

William E. Althouse
LAT Project Manager

Date

Approved by:

Original Signed 04/26/02

Elizabeth Citrin
GLAST Project Manager

Date

CHANGE RECORD PAGE

DOCUMENT TITLE: GLAST LAT Instrument – Spacecraft Interface Requirements Document

DOCUMENT DATE: April 24, 2002

ISSUE	DATE	PAGES AFFECTED	DESCRIPTION
Original	01/29/01	All	Baseline. CCR 433-0003.
Revision A	01/04/02	All	Re-baseline CCR 433-0006.
Revision B	04/24/02	All	Re-baseline CCR 433-0031.
CH-01	05/07/02	iii, 1, 2, 5-7, 10-13, 15, 16, 18, and 27-31.	CCRs: 433-0045, 433-0046, 433-0047, 433-0048, 433-0049, 433-0050, 433-0054, and 433-0056.
CH-02	01/02/03	iii, 21 and 22.	CCRs: 433-0075 and 433-0076.
CH-03	01/23/03	iii, 21, 23 and 25.	CCRs: 433-0078 and 433-0089.
CH-04	03/20/03	iii and 26.	CCR 433-0108.
CH-05	04/14/03	iii and 22.	CCR 433-0100.
CH-06	05/01/03	iii, ix and 15-20.	CCR 433-099 R1.
CH-07	05/30/03	iii, 16, 17, 19, 20, 25-27.	CCR 433-0151, 433-0153 and 433-0155.
CH-08	07/01/03	iii, 9 10, 20, 22, 23 and 27.	CCR 433-0129, 433-0130, 433-0131, 433-0162 and 433-0165.
CH-09	8/01/03	iii, 10 and 11.	CCR 433-0137.
CH-10	9/05/03	iii and 23.	CCR 433-0181.
CH-11	10/24/03	iii, 13 and 29-34.	CCR 433-0178 R1.
CH-12	12/16/03	iii, 9, 10, 13 and 29-35.	CCR 433-0204 and 433-0207.
CH-13	01/23/04	iii and 25.	CCR 433-0218.
CH-14	02/11/04	iii, 8 and 14.	CCR 433-0156 and 433-0224.
CH-15	02/18/04	iii and 16.	CCR 433-0183 R1.
CH-16	03/24/04	iii, 9, 15, 24 and 25.	CCR 433-0226, 433-0227 and 433-0237 R1.
CH-17	6/24/04	iii and 17	CCR-433-0239

DOCUMENT TITLE: GLAST LAT Instrument – Spacecraft Interface Requirements Document

DOCUMENT DATE: April 24, 2002

ISSUE	DATE	PAGES AFFECTED	DESCRIPTION
CH-18	7/16/04	iv, 16	CCR 433-0252
CH-19	9/10/04	iv and 16	CCR 433-0263

TABLE OF CONTENTS

1 Introduction 1
1.1 Purpose 1
1.2 Relation to Other Documents 1

2 Applicable and reference Documents 2
2.1 Applicable 2
2.2 Reference Documents 2

3 Requirements 3
3.1 Definition of Flight System 3
3.1.1 Observatory 3
3.1.2 Flight System Interfaces 3
3.2 Interface Requirements and Constraints 5
3.2.1 General Interface Requirements 5
3.2.1.1 Coordinate Systems 5
3.2.1.2 Celestial Coordinates 6
3.2.1.3 Pointing Knowledge 6
3.2.1.3.1 SC-LAT Alignment Measurements 6
3.2.1.3.2 SC-LAT Alignment Error 6
3.2.1.3.3 SC-LAT Alignment Stability Through Vibration/Acoustic Testing 6
3.2.1.3.4 SC-LAT Interface Mechanical Integrity During Ground Operations 6
3.2.1.4 LAT CAD, Structural and Thermal Models 6
3.2.1.5 Ground Environment 7
3.2.1.5.1 Ambient Temperature 7
3.2.1.5.2 Ambient Humidity 7
3.2.1.5.3 Nitrogen Purge Access 7
3.2.1.5.4 Contamination Control 7
3.2.1.6 Use of Metric System 7
3.2.2 Mechanical 8
3.2.2.1 Fairing Envelope Constraint 8
3.2.2.2 LAT Stay Clear Zone 8
3.2.2.3 Instrument Interface Structure 8
3.2.2.4 LAT Mass Constraint 8
3.2.2.5 Center of Gravity (CG) Constraints 8
3.2.2.6 Clear Field of View 8
3.2.2.7 Moments of Inertia 9
3.2.2.8 Structural Design Requirements 9
3.2.2.8.1 Stiffness 9
3.2.2.8.1.1 Observatory 9
3.2.2.8.1.2 LAT 9
3.2.2.8.2 Static Load Design 9
3.2.2.8.3 Factors of Safety 10
3.2.2.8.4 Component Evaluation Random Vibration 10
3.2.2.8.5 Acoustics 10
3.2.2.8.6 Pyroshock 10
3.2.2.8.7 LAT Structural Finite Element Model (FEM) 11
3.2.2.8.8 LAT Handling Procedures 12
3.2.2.8.9 Sinusoidal Swept Vibration 12
3.2.3 Thermal 12

3.2.3.1 LAT Thermal System 12
3.2.3.2 SC Thermal System 12
3.2.3.3 LAT-SC General Thermal System Interfaces 12
3.2.3.4 LAT-SC LAT Radiator Interfaces 13
3.2.3.4.1 LAT Radiator Size and Configuration 13
3.2.3.4.2 LAT Radiator Positioning 13
3.2.3.4.3 LAT Radiator Mounting 13
3.2.3.4.4 LAT Radiator Field of View 14
3.2.3.4.5 LAT Radiator IR Backload (IR Emitted by the Solar Arrays and Absorbed by the LAT Radiators) 14
3.2.3.4.6 LAT Radiator Direct Solar Loading 14
3.2.3.5 Thermal Environmental Parameters 15
3.2.3.6 Thermal Models 15
3.2.3.6.1 General Thermal Model Requirements 15
3.2.3.6.2 LAT Thermal Model Requirements 15
3.2.3.6.3 SC Solar Array Thermal Model Requirements 15
3.2.3.7 Thermal Test Requirements 16
3.2.4 Electrical 16
3.2.4.1 Power System 16
3.2.4.1.1 Average Power 16
3.2.4.1.1.1 LAT Average Power Consumed 16
3.2.4.1.1.2 Spacecraft Average Power Supplied 16
3.2.4.1.1.3 Spacecraft Power Regulator Unit (PRU) Capacity 16
3.2.4.1.2 Peak Power 16
3.2.4.1.2.1 SIU Peak Power ..... 16~~17~~
3.2.4.1.2.2 VCHP Reservoir Heater Peak Power ..... 16~~17~~
3.2.4.1.2.3 DAQ Peak Power 17
3.2.4.1.3 Voltage 17
3.2.4.1.3.1 Voltage Provided to the LAT 17
3.2.4.1.3.2 DC Voltage Tolerance 17
3.2.4.1.3.3 Voltage Transients 17
3.2.4.1.4 Current 17
3.2.4.1.4.1 Over-current Protection 17
3.2.4.1.4.2 Current Transients ..... 17~~18~~
3.2.4.1.5 Impedances ..... 17~~18~~
3.2.4.1.5.1 Power Source Impedance ..... 17~~18~~
3.2.4.1.5.2 LAT Power Input Impedance 18
3.2.4.1.5.3 LAT Common Mode Impedance 18
3.2.4.1.5.4 LAT Differential Mode Impedance 18
3.2.4.1.6 Operational Power Distribution 18
3.2.4.1.6.1 Definition of Feeds 18
3.2.4.1.6.2 Power Lines 18
3.2.4.1.6.3 Power Line Exclusivity 18
3.2.4.1.6.4 Toleration of Simultaneous Power on Redundant Lines 19
3.2.4.1.6.5 LAT Toleration of Power Interruption 19
3.2.4.1.6.6 Independence of Power Feeds 19
3.2.4.1.6.7 No Common DC/DC Converters for the DAQ and VCHP Reservoir Heater Feeds 19
3.2.4.1.7 Survival Heater Power 19
3.2.4.1.7.1 Redundant Survival Heaters 19
3.2.4.1.7.2 Redundant Survival Heater Power Feeds 19

3.2.4.1.7.3 Continuous Power to Survival Heaters ..... 19~~20~~
3.2.4.1.7.4 Survival Heater Isolation 20
3.2.4.1.7.5 Intentionally Left Blank. 20
3.2.4.1.7.6 Survival Heater Power Consumption 20
3.2.4.1.7.7 Survival Heater Power Control ..... 20~~21~~
3.2.4.1.7.8 Voltage for Grid and Variable Conductance Heat Pipe Anti-Freeze Heater Sizing 21
3.2.4.1.8 Isolation 21
3.2.4.2 Grounding 21
3.2.4.3 Electromagnetic Interference / Compatibility (EMI / EMC) 21
3.2.4.4 LAT Harness 21
3.2.4.5 Command and Data Handling (C&DH) Interfaces 21
3.2.4.5.1 Interface Conductors 21
3.2.4.5.2 Interface Circuitry Isolation ..... 21~~22~~
3.2.4.5.3 Physical Characteristics of Interface Signals ..... 21~~22~~
3.2.4.6 Test Point Interfaces 22
3.2.4.6.1 SC Integration and Test Use 22
3.2.4.6.2 Performance Verification Limit 22
3.2.4.6.3 Keyed Connectors 22
3.2.4.6.4 Internal Cable Access 22
3.2.4.6.5 Ground Test Connector Access 22
3.2.4.6.6 Power and Load Isolation 22
3.2.4.6.7 Failure Propagation ..... 22~~23~~
3.2.4.6.8 Short-Circuit Isolation ..... 22~~23~~
3.2.4.6.9 Grounding Integrity 23
3.2.4.6.10 Flight Standards 23
3.2.4.6.11 Test Point Documentation 23
3.2.5 Command and Data Handling 23
3.2.5.1 Command, Telemetry, and Data Bus (CTDB) 23
3.2.5.1.1 CTDB Specification 23
3.2.5.1.2 CTDB Protocol 23
3.2.5.2 Time Support 23
3.2.5.2.1 Pulse Per Second (PPS) Bus 23
3.2.5.2.2 GPS Receiver Time Dropout 23
3.2.5.2.3 PPS Signal Drift ..... 23~~24~~
3.2.5.2.4 Spacecraft to Instrument Interface Simulator (SIIS) ..... 23~~24~~
3.2.5.3 Control and Monitoring 24
3.2.5.3.1 Analog Signals 24
3.2.5.3.2 Analog Signal Sampling 24
3.2.5.3.2.1 Analog Sampling Rate 24
3.2.5.3.2.2 Analog Sample Reporting 24
3.2.5.3.2.3 Analog Sampling Resolution 24
3.2.5.3.3 Discrete Control Signals 24
3.2.5.3.4 Discrete Monitor Signals 24
3.2.5.4 LAT to SC Science Data Interface ..... 24~~25~~
3.2.5.4.1 LAT to SC Interface Data Rate ..... 24~~25~~
3.2.5.4.2 LAT to SC Interface Transmitters and Receivers ..... 24~~25~~
3.2.5.4.3 Maximum Signal Frequency 25
3.2.5.4.4 LAT to SC Interface Configuration 25
3.2.5.4.5 Data Volume 25
3.2.5.4.6 Packet Format 25

3.2.5.4.7 CCSDS Packet Synchronization Marker 25
3.2.5.4.8 Science Data Interface Redundancy 25
3.2.6 Software / Data ..... 25~~26~~
3.2.6.1 Commands ..... 25~~26~~
3.2.6.1.1 CTDB (1553) Commands ..... 25~~26~~
3.2.6.1.1.1 LAT Object Loads 26
3.2.6.1.1.2 LAT Configuration Commands 26
3.2.6.1.2 LAT Real-Time Command Frequency 26
3.2.6.2 Telemetry 26
3.2.6.2.1 CTDB (1553) Telemetry 26
3.2.6.2.2 LAT Housekeeping Data 26
3.2.6.2.3 Application Identifier (APID) Allocation 26
3.2.6.2.4 LAT Science Data Subset 26
3.2.6.2.5 LAT Object Dumps ..... 26~~27~~
3.2.6.2.6 Instrument Health and Safety Monitoring ..... 26~~27~~
3.2.6.3 Time Messages 27
3.2.6.3.1 Distribution Format 27
3.2.6.3.2 Distribution Timing 27
3.2.6.4 Ancillary Data 27
3.2.6.4.1 Ancillary Data Packet 27
3.2.6.5 Transient Event Data Reporting 27
3.2.6.5.1 LAT-detected Transient Event Data Reporting 27
3.2.6.5.1.1 LAT generated Burst Alert Telemetry 27
3.2.6.5.1.2 Autonomous Repoint Request Telecommand 27
3.2.6.5.1.3 Autonomous Repoint Request Response 27
3.2.6.5.1.4 Telecommands to the GBM ..... 27~~28~~
3.2.6.5.2 GBM-detected Transient Event Data Reporting ..... 27~~28~~
3.2.6.5.2.1 Immediate Trigger Signal 28
3.2.6.5.2.2 GBM Telecommands to LAT 28
3.2.6.6 SAA Entry / Exit Messages 28
3.2.7 IMMEDIATE Trigger Signal 28
3.2.7.1 Immediate Trigger Signal Frequency 28
3.2.7.2 Immediate Trigger Signal Characteristics 28
3.2.7.3 Reserved 28
3.2.7.4 Immediate Trigger Signal Redundancy 28
3.2.8 Fault Protection ..... 28~~29~~
3.2.8.1 Fault Tolerance ..... 28~~29~~
3.2.8.2 Safe Mode Notification ..... 28~~29~~
3.2.8.3 Load Shedding 29
3.2.8.3.1 Load Shedding Causes 29
3.2.8.3.2 Load Shedding Notification 29
3.2.8.4 Instrument Protection 29

4 Appendix A: LAT Instrument Stay Clear drawing. 30

List of Tables

Table 3-1: Design Limit Loads 9
Table 3-1.1: Alternate Quasi-Static Limit Load Factors..... 10

List of Figures

Figure 3-1. Observatory Subsystems..... 3
Figure 3-2: Flight System Interfaces 5
Figure A-1: LAT Instrument Stay Clear Drawing..... 30

ACRONYM LIST

ACD	Anti-Coincidence Detector	
ACS	Attitude Control Subsystem	
APID	Application Identifier	
C&DH	Command and Data Handling	
CCSDS	Consultative Committee for Space Data Systems	
CG	Center of Gravity	
CTDB	Command, Telemetry and Data Bus	
DAQ	Data Acquisition System	CH-06
Dec	Declination	
EMC	Electromagnetic Compatibility	
EMI	Electromagnetic Interference	
FDIR	Fault Detection Isolation and Recovery	
FEM	Finite Element Model	
GBM	GLAST Burst Monitor	
GFE	Government-Furnished Equipment	
GEVS-SE	General Environmental Verification Specification for STS and ELV Payloads, Subsystems and Components	
GLAST	Gamma-ray Large Area Space Telescope	
GNC	Guidance, Navigation and Control	
GPS	Global Positioning System	
GSE	Ground Support Equipment	
GSFC	Goddard Space Flight Center	
ICD	Interface Control Document	
IGES	International Graphics Exchange Specification	
IPO	Instrument Program Office	
IRD	Interface Requirements Document	
kbps	kilobits per second	
kg	kilogram	
LAT	Large Area Telescope	
LIP	LAT Interface Plane	
LVDS	Low Voltage Differential Signal	
MECO	Main Engine Cut Off	
MLI	Multi Layer Insulation	
PAF	Payload Attach Fitting	
PDR	Preliminary Design Review	
PMT	Photomultiplier tubes	
PPG	Payload Planner's Guide	
PPS	Pulse Per Second	
PVT	Position, Velocity and Time	
RA	Right Ascension	
SC	Spacecraft	
SI	Systeme Internationale	
SINDA	Systems Improved Numerical Differencing Analysis	
SIU	Spacecraft Interface Unit	CH-06
SLAC	Stanford Linear Accelerator Center	
sr	Steradian	
TBD	To Be Determined	
TBR	To Be Resolved	
TBS	To Be Supplied	
TDRSS	Tracking and Data Relay Satellite System	
TSS	Thermal Synthesizer System	
UV	Ultra Violet	
V	Volt	

VCHP	Variable Conductance Heat Pipe
W	Watt

1 INTRODUCTION

1.1 PURPOSE

The primary purpose of this Interface Requirements Document (IRD) is to describe and specify the mechanical, electrical and data interfaces between the Gamma-ray Large Area Space Telescope (GLAST) Large Area Telescope (LAT) Instrument and the Spacecraft (SC). In addition, it assigns certain interface responsibilities and provides design guidelines in certain areas.

1.2 RELATION TO OTHER DOCUMENTS

The requirements in this document nominally flow down directly to the LAT and SC from either the Science Requirements Document, 433-SRD-0001, or the Mission System Specification, 433-SPEC-0001. In addition, the SC Performance Specification, 433-SPEC-0003 may levy peer requirements. CH-01

2 APPLICABLE AND REFERENCE DOCUMENTS

2.1 APPLICABLE

The following documents contain requirements that are invoked by this document, the GLAST LAT IRD, 433-IRD-0001.

433-SRD-0001, GLAST Science Requirements Document, September 2000

433-SPEC-0003, GLAST Spacecraft Performance Specification

433-SPEC-0001, GLAST Mission System Specification

433-MAR-0001, LAT Mission Assurance Requirements Document

433-MAR-0003, Spacecraft Mission Assurance Requirements Document

433-RQMT-0005, GLAST Satellite Electromagnetic Interference (EMI) Requirements Document

CCSDS102.0-B-5, Recommendation for Space Data Systems Standards, November 2000 (Packet Telemetry Blue Book) http://www.ccsds.org/publications.html - telemetry

Delta II Payload Planners Guide (PPG), MDC 00H0016, October 2000. http://www.boeing.com/defense-space/space/delta/docs/DELTA_II_PPG_2000.PDF

GEVS-SE Rev A, General Environmental Verification Specification for STS & ELV Payloads, Subsystems, and Components, June 1996 http://arioch.gsfc.nasa.gov/302/gevs-se/toc.htm

CH-01

Mil-STD-1553B, “Aircraft Internal Time Division Command/Response Multiplex Data Bus”, 21 September, 1978

NASA HDBK 4001. “Electrical Grounding Architecture for Unmanned Spacecraft”, February 17, 1998 http://starbase.msfc.nasa.gov/TSL/dispsearch.htm?agency=NASA&disp=E

NPD 8010.2C, Use of the Metric System of Measurement in NASA programs

2.2 REFERENCE DOCUMENTS

Requirements in this Specification reference the following documents:

433-OPS-0001, GLAST Operations Concept Document

CH-01

3 REQUIREMENTS

3.1 DEFINITION OF FLIGHT SYSTEM

3.1.1 OBSERVATORY

There are three subsystems in the GLAST Observatory: a Spacecraft Bus (SC) subsystem, a LAT subsystem, and a GLAST Burst Monitor (GBM) subsystem, as shown in Figure 3-1. Different contractors or institutions will build these subsystems separately. When integrated, these subsystems form the GLAST Observatory. Additionally, this figure shows the Observatory coordinate system axes directions.

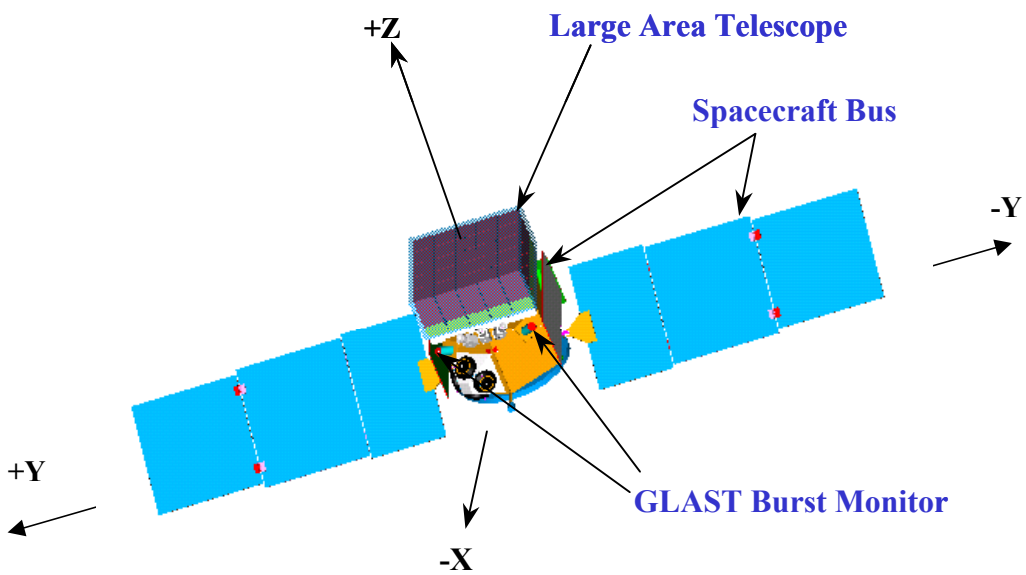

Figure 3-1. Observatory Subsystems

3.1.2 FLIGHT SYSTEM INTERFACES

The flight system is defined as “everything that flies”: instruments, SC, and launch vehicle. Figure 3-2 shows these components of the flight system and the interfaces between them. It also shows that the flight system has in-flight interfaces with the Tracking and Data Relay Satellite System (TDRSS) communications satellite system, with direct ground stations, and with the constellation of GPS satellites.

The SC must directly accommodate the launch vibration environment, fairing envelope, and mounting configuration of the payload attach fitting. While on the launch pad, it receives umbilical power and communicates through the umbilical for command and telemetry.

Together, the SC and instruments (aka. the Observatory) interface with the launch vehicle as they must accommodate the launch environment (vibration, acoustics, pressure, and temperature) and the fairing envelope. The SC must accommodate the instruments' mechanical mounting, field of view requirements, and their thermal interface requirements. Additionally, the SC provides power services and command and telemetry services to the instruments. This document addresses the SC-LAT interfaces.

There are no mechanical interfaces between the GBM and LAT. The only electrical interface between the GBM and LAT is the burst trigger signal which is carried by SC-supplied cabling between the GBM and LAT as part of the SC bus harness. This interface will be further defined in an ICD between all three subsystems subsequent to the selection of SC contractor.

The SC interfaces with direct ground stations for the downlink of high rate telemetry data. It interfaces with TDRSS when communications are needed at unscheduled times or when coverage is needed over a greater portion of the orbit than the direct downlink provides. The demand access service of TDRSS is used for unscheduled alert transmissions, safe mode and transient events, and unscheduled target-of-opportunity commanding. Extended coverage is needed during launch and early orbit operations, during any safe mode contingency operations, and for servicing the LAT (diagnostics, software uploads).

Finally, the SC receives time and position services continuously throughout the mission from the GPS. The SC distributes a pulse-per-second signal via hardwire to provide an accurate time mark.

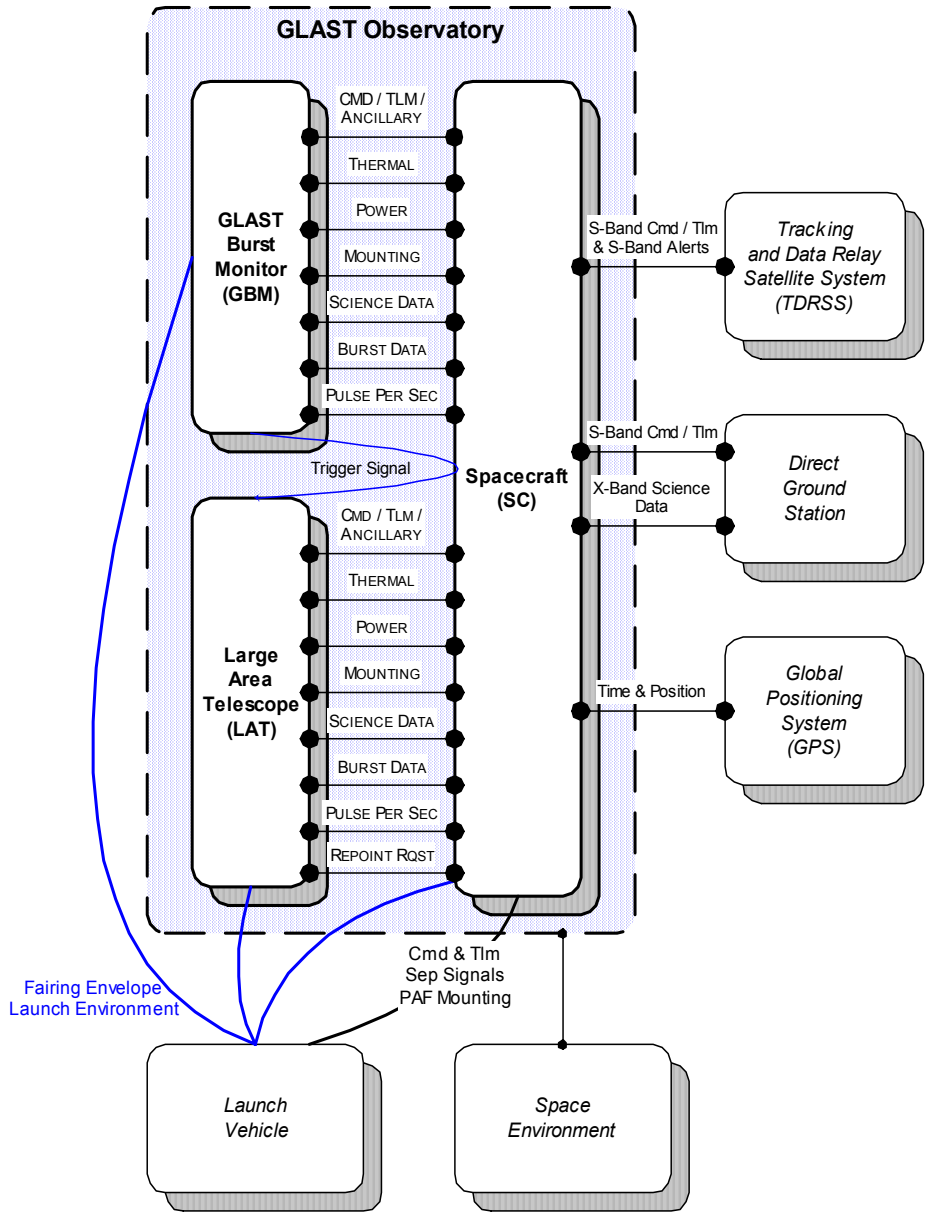

Figure 3-2: Flight System Interfaces

3.2 INTERFACE REQUIREMENTS AND CONSTRAINTS

3.2.1 GENERAL INTERFACE REQUIREMENTS

3.2.1.1 Coordinate Systems

The SC coordinate system shall be as defined in the Spacecraft Performance Specification, 433-SPEC-0003. The LAT coordinate system and the LAT Interface Plane (LIP) shall be as defined in Figure A-1. The LAT coordinate system axes shall be nominally co-aligned with those of the SC coordinate system. The LAT IPO and SC CH-01

contractor shall use the SC coordinate system in all models that are interchanged between the LAT IPO, the SC contractor, and/or the GSFC Project Office.

3.2.1.2 Celestial Coordinates

The Observatory shall use celestial coordinates relative to the J2000 coordinate frame. Pointing commands to the Observatory and pointing directions reported by the Observatory shall be by Right Ascension (RA) and Declination (Dec) in J2000 coordinates.

3.2.1.3 Pointing Knowledge

The Observatory pointing knowledge budget shall be allocated as specified in the Mission System Specification, 433-SPEC-0001.

3.2.1.3.1 SC-LAT Alignment Measurements

At four points in the Observatory integration and test flow, specifically pre- and post-vibration/acoustic testing, and pre- and post-shipment to the launch site, the SC contractor shall verify the mechanical alignment of the SC coordinate system (defined by the GNC alignment references) relative to the LAT coordinate system (defined by LAT-supplied alignment references).

3.2.1.3.2 SC-LAT Alignment Error

The relative alignment of these two coordinate systems shall be verified to be within 30 arcmin (maximum; RSS of the X, Y, and Z axis alignment errors) of nominal.

3.2.1.3.3 SC-LAT Alignment Stability Through Vibration/Acoustic Testing

For the pre- and post-vibration/acoustic test alignment measurements specified in 3.2.1.3.1, the measurement error shall be suitable for verifying that the motions of the alignment-sensitive mechanical interfaces remain within analytically predictable ranges.

3.2.1.3.4 SC-LAT Interface Mechanical Integrity During Ground Operations

Alignment measurements taken at other times during the I&T flow shall have errors suitable for verifying the continued mechanical integrity of the alignment-sensitive mechanical interfaces.

3.2.1.4 LAT CAD, Structural and Thermal Models

Design models shall be readily exchanged electronically between the LAT Instrument Program Office (IPO), the Goddard Space Flight Center (GSFC) GLAST Project Office, and the SC contractor. This requires the use of common design tools and versions for file format compatibility. Alternate formats are acceptable only when approved by the GSFC Project Office.

Exchange of mechanical Computer Aided Design (CAD) information shall primarily use the International Graphics Exchange Specification (IGES) neutral file format (bounded

surface models). Other formats, such as the STEP file format, may also be required. All design models shall use SI units.

Contractually, the GSFC Project Office shall provide the LAT structural and thermal models to the SC contractor as Government Furnished Equipment (GFE), per need dates negotiated between the SC contractor, the LAT IPO, and the GSFC Project Office.

3.2.1.5 Ground Environment

3.2.1.5.1 Ambient Temperature

During Observatory-level integration, transportation, storage, and pre-launch activities, the SC contractor shall provide an ambient temperature between 15 °C and 30 °C. The instrument provider shall be responsible for providing any special cooling or heating required for the instrument.

3.2.1.5.2 Ambient Humidity

During Observatory-level integration, transportation, storage, and pre-launch activities, the SC contractor shall provide continuous relative humidity of 30 % to 55 %. The instrument provider shall be responsible for providing any special humidity controls required for the instrument.

3.2.1.5.3 Nitrogen Purge Access

Access to accommodate a gaseous nitrogen purge source shall be provided at all times up to the launch event. Upon delivery to Observatory I&T, the SC contractor shall assume responsibility for the LAT nitrogen purge operations.

Note: Nitrogen purge will be necessary to prevent a LAT internal subsystem from being exposed to relative humidity of greater than 45%. CH-01

3.2.1.5.4 Contamination Control

During Observatory-level integration, transportation, storage, and pre-launch activities, the SC contractor shall provide a Class 100,000 (or better) environment. The instrument provider will be responsible for providing any special contamination controls required by the instrument.

3.2.1.6 Use of Metric System

GLAST shall observe the current NASA policy directive, NPD 8010.2C, Use of the Metric System of Measurement in NASA programs.

Metric units shall be used with the following exceptions: Angular measure may be expressed in degrees, minutes, and seconds; Photon and particle energy may be expressed in eV; and English units may be used for mechanical fabrication.

3.2.2 MECHANICAL

3.2.2.1 Fairing Envelope Constraint

The fairing envelope constraints shall be followed as shown in the reference document, Delta II Payload Planner's Guide (PPG) for the 3-meter fairing, two stage configuration (6915 PAF). The maximum static dimensions of the LAT shall be constrained as defined in Figure A-1 and technical notes contained in Appendix A.

3.2.2.2 LAT Stay Clear Zone

The SC shall interface to the LAT, without violating the static stay-clear dimensions defined in drawing Figure A-1. The dimensions define the maximum envelope available for the instrument for static design purposes, and margin to allow for dynamic instrument motions under load shall be allowed for by the spacecraft.

3.2.2.3 Instrument Interface Structure

The SC contractor shall provide an interface structure to adapt the structural configuration of the LAT to that of the SC and provide mounting support for the LAT. Mounting locations for the LAT shall be as shown in Figure A-1. The interface structure shall accommodate such things as the routing of electrical cables and dedicated thermal links (if necessary) between the SC and LAT, as well as provide access to such components for integration.

3.2.2.4 LAT Mass Constraint

The maximum launch mass of the LAT shall be constrained to 3000 kilograms (kg). This does not include the instrument interface structure, but does include any LAT hardware mounted on the SC bus, such as thermal radiators.

Note the LAT Interface Plane (LIP), as shown in Figure A-1, is the plane of attachment of the Instrument Interface Structure, but does not constitute the mass boundary of the LAT.

3.2.2.5 Center of Gravity (CG) Constraints

The center of gravity (CG) of the spacecraft bus when combined with that of the science instruments shall meet the observatory CG constraint as specified in the Payload Planners Guide for the baseline launch vehicle specified in the Mission System Specification, 433-SPEC-0001.

The LAT Z-axis CG location shall not exceed that shown in Figure A-1, and shall be nominally on the Figure A-1 center line such that CMx ≤ 20 mm, Cmy ≤ 20 mm. CH-14

3.2.2.6 Clear Field of View

Following on-orbit deployment, the SC shall not at any time position any components above the LIP defined in Figure A-1.

3.2.2.7 Moments of Inertia

The maximum launch moments of inertia of the LAT, about the LAT origin, shall be constrained to Ixx ≤ 1400 kg-m^2, Iyy ≤ 1350 kg-m^2, Izz ≤ 1588 kg-m^2, |Ixy| ≤ 30 kg-m^2, |Ixz| ≤ 30 kg-m^2, and |Iyz| ≤ 30 kg-m^2. This does not include the instrument interface structure, but does include any LAT hardware mounted on the SC bus, such as thermal radiators. LAT moments of inertia shall be calculated at the instrument level, with a maximum 1- sigma uncertainty of 1.5%, based on measurements at the module level. CH-16

3.2.2.8 Structural Design Requirements

3.2.2.8.1 Stiffness

3.2.2.8.1.1 Observatory

The fixed base stiffness, (fixed at the PAF interface of the Observatory), shall be as specified in the Spacecraft Performance Specification, 433-SPEC-0003.

3.2.2.8.1.2 LAT

The fixed base stiffness, fixed at the SC-LAT interface points, shall produce a first mode frequency greater than 50 Hz.

3.2.2.8.2 Static Load Design

The design of the LAT primary structure shall use the quasi-static limit load factors in Table 3-1 and 3-1.1 applied at the LAT CG. Table 3-1 loads are given in units of gravitational acceleration, g=9.81 m/s^2. CH-08, CH-12

Event / Axis	Main Engine Cut Off (MECO)
Thrust	+6.2 ± 0.6
Lateral	±0.2

CH-12

Table 3-1: Design Limit Loads

For Table 3-1, thrust and lateral loads shall be applied simultaneously in all combinations within each event. In the thrust axis "+" indicates compression and "-" indicates tension. The lateral loads shall be applied in all directions. CH-08

Quasi-Static Limit Load Factors For Liftoff and Airloads	
Direction	**Acceleration (g=9.81 m/s^2 or rad/sec^2)**
Lateral X	±1.36
Lateral Y	±1.82
Thrust Z	+2.9/-0.28
RX	±44.26
RY	±11.12
RZ	±9.04

CH-12

Table 3-1.1: Quasi-Static Limit Load Factors for Liftoff and Airloads

For Table 3-1.1, loads shall be applied simultaneously. In the thrust axis "+" indicates compression and "-" indicates tension. The X, Y, and Z directions denote the LAT coordinate system. RX, RY, and RZ indicate rotations about the X, Y, and Z directions, respectively. CH-12

The design of secondary instrument structure and components shall use a limit load factor of ± 12.0 g applied to each axis independently.

LAT primary structure includes the LAT Grid, ACD, Radiators, Calorimeters, Tower Electronics Modules and Trackers. Secondary structures include only subsystem components. CH-01

3.2.2.8.3 Factors of Safety

Factors of safety are multiplicative factors that are applied to limit loads to evaluate the yield and ultimate strength levels of the structural design. Requirements for the appropriate use of factors of safety are given in the referenced GEVS-SE Rev A document.

3.2.2.8.4 Component Evaluation Random Vibration

The evaluation of components (with "components" as defined in the GEVS-SE) shall use the generalized random vibration power spectral density in GEVS-SE.

3.2.2.8.5 Acoustics

The acoustic spectrum for the Delta II 2920H-10 launch vehicle shall be used. The preliminary spectrum is defined in the GLAST Spacecraft Performance Specification, 433-SPEC-0003.

3.2.2.8.6 Pyroshock

The payload shock response spectrum at the SC-LAT interface shall be as shown in the figure below: CH-09

Payload Shock Response Spectrum Protoflight Levels

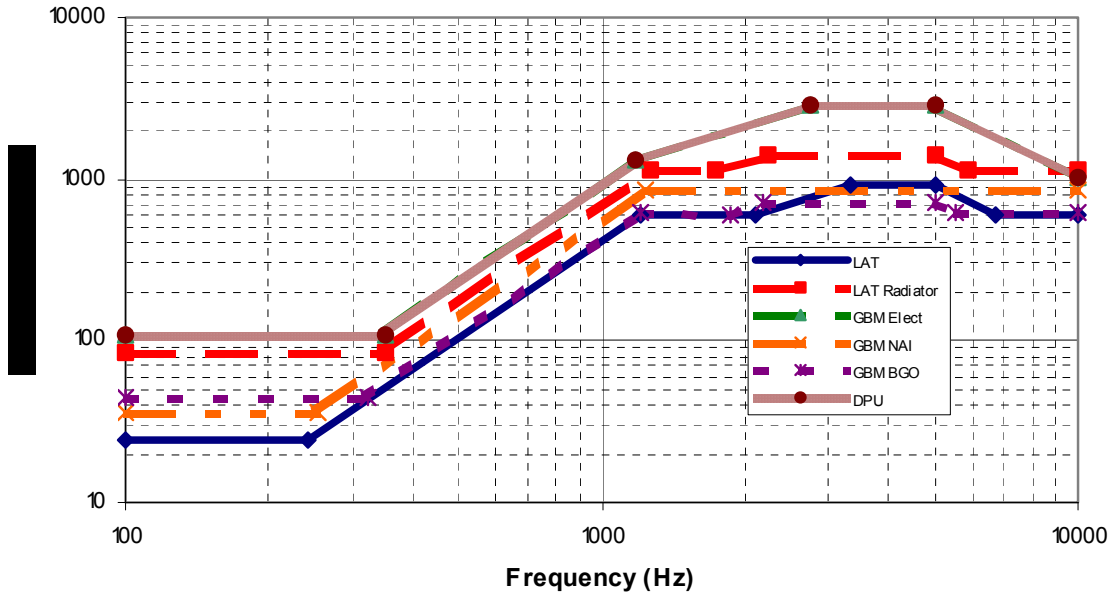

The tabular data used in construction of the figure is shown below for reference: CH-09

LAT		LAT Radiator		GBM Elect		GBM NAI		GBM BGO		DPU	
Freq (Hz)	SRS (g's)	Freq (Hz)	SRS (g's)	Freq (Hz)	SRS (g's)	Freq (Hz)	SRS (g's)	Freq (Hz)	SRS (g's)	Freq (Hz)	SRS (g's)
100	24	100	85	100	111	100	36	100	45	100	111
242	24	350	85	350	111	254	36	323	45	350	111
1201	606	1269	1127	1172	1295	1230	851	1202	624	1172	1295
2095	606	1724	1127	2757	2849	10000	851	1872	606	2757	2849
3342	932	2228	1427	5000	2849			2175	716	5000	2849
5000	932	5000	1427	10000	1036			5000	716	10000	1036
6715	606	5879	1127					5497	624		
10000	606	10000	1127					10000	624		

3.2.2.8.7 LAT Structural Finite Element Model (FEM)

The GSFC Project Office will electronically deliver a LAT FEM to the SC contractor as GFE. This structural model will be provided in a file format compatible with the SC contractor (expected to be NASTRAN). The delivery date for this model will be specified in the SC Statement of Work. This model is required so that the SC contractor may combine the LAT structural model with a SC FEM and perform a coupled loads analysis. As mentioned in section 3.2.1.6, metric system of units shall be used in creation of the LAT FEM. CH-01

3.2.2.8.8 LAT Handling Procedures

The LAT handling procedures for use during Observatory integration, transportation, storage and pre-launch activities shall be as negotiated and documented in the LAT Instrument Transportation and Handling Plan. CH-01

3.2.2.8.9 Sinusoidal Swept Vibration

The sinusoidal swept vibration spectrum up to 50 Hz is given by the Delta II Payload Planner's Guide for the 2920-10 launch vehicle, or by a mission-specific spectrum that will be developed as a result of flight data and/or GLAST mission-level coupled loads analysis. (NASA policy is not to go above 50 Hz in any Sine Vibration test). It is assumed that the spectrum given by the Delta II Payload Planners Guide for the 2920-10 vehicle envelopes that for the 2920H-10 vehicle. The 2920H-10 has not yet flown, and once it does, the levels shown in the Delta II PPG may be updated. CH-01

3.2.3 THERMAL

3.2.3.1 LAT Thermal System

The design and performance of the LAT thermal system shall be the responsibility of the LAT IPO. The LAT thermal system is defined to include all LAT surfaces and thermal couplings that affect the LAT heat balance. The LAT thermal system includes all dedicated LAT radiating surfaces that may be located on the SC, as well as all thermal couplings that transport heat to those surfaces from the LAT.

3.2.3.2 SC Thermal System

The design and performance of the SC thermal system shall be the responsibility of the SC contractor. The SC thermal system is defined to include all SC surfaces and thermal couplings that affect the SC heat balance. The SC thermal system includes all dedicated SC radiating surfaces, as well as all thermal couplings that transport heat to those surfaces from the SC.

3.2.3.3 LAT-SC General Thermal System Interfaces

The LAT and the SC shall be thermally isolated via SC support structure and multi-layer insulation (MLI) radiation barriers. Instrument surfaces, excepting only the radiating surfaces of the LAT radiators defined in 3.2.3.4, shall be insulated with MLI.

SC surfaces that view the radiating surface of the LAT radiators shall meet the requirements of 3.2.3.4.

SC surfaces that view LAT MLI insulation shall also be insulated with MLI, except as negotiated and documented in the SC-LAT ICD to allow for SC radiators and apertures.

LAT engineers shall provide and install all MLI blankets that attach to the LAT, and the SC contractor shall provide and install all MLI blankets that attach to the SC.

Additional MLI blankets required to closeout cavities between LAT and SC MLI blankets shall be negotiated and documented in the SC-LAT ICD. These blankets, if required, shall be provided and installed by the SC contractor.

All MLI blankets shall be designed to provide an effective emittance no greater than 0.03. The LAT thermal design shall accommodate the radiative heat leak through the MLI, assuming SC temperatures varying between -10 C and +50 C.

The total worst case conductive heat exchange between the SC and LAT, including cables and the interface support structure that attaches the SC to the LAT at the SC mount points shown in Figure A-1, shall not exceed ± 5W. This requirement shall be met for minimum LAT temperatures (-20C) combined with maximum SC temperatures, and for maximum LAT temperatures (+35C), combined with minimum SC temperatures. [The worst case conductive heat exchange across the SC support points for the LAT radiators is an additional thermal load specified in 3.2.3.4.3]

The SC shall provide all required thermal isolation hardware at all locations where the LAT and the SC are physically in contact.

3.2.3.4 LAT-SC LAT Radiator Interfaces

The SC shall accommodate the LAT's thermal radiators, as shown in drawing Figure A-1, and described in the following subparagraphs. Figure A-1 defines the static design envelope for the LAT hardware, and the SC shall allow for the LAT's violation of this envelope under load, as negotiated and documented in the SC-LAT ICD.

3.2.3.4.1 LAT Radiator Size and Configuration

The SC shall accommodate, and the LAT thermal design shall be consistent with, a minimum radiating area for the LAT Radiators of 5.4 m^2. This area shall be configured as two separate radiators, each with a minimum radiating area of 2.7 m^2, including the outward facing surfaces of the VCHP reservoir volume. The radiators shall be no more than 1.903 m wide, with a stay-clear dimension of 54.5 mm to accommodate the thickness of the radiators and any attached MLI. An additional stay-clear dimension of 59.5 mm, 48 mm on the outboard side and 11.5 mm on the inboard side, is included at the –Z end of the radiators to accommodate the Variable Conductance Heat Pipes (VCHPs), as shown in View A-A of Figure A-1. The overall length of each LAT radiator panel, in View A-A of Figure A-1, shall be no greater than 1.586 m, beginning at the LIP and extending in the –Z direction. CH-11 CH-11

The pad size and location of the spacecraft interface to the LAT Radiators is defined in View G-G of Appendix A. CH-12

Five cutouts are defined in View B-B of Appendix A. The radiators shall not encroach into these cutout volumes. The spacecraft shall ensure that hardware penetrating through these cutouts maintains a clearance to the envelope to accommodate all predicted dynamic and thermal relative motions. CH-11

3.2.3.4.2 LAT Radiator Positioning

The LAT radiators shall be nominally positioned as shown in drawing Figure A-1. The nominally flat radiating surfaces shall be positioned parallel to the XZ-plane of the Observatory, to a tolerance consistent with meeting the yaw-steering heat load requirement contained in the Spacecraft Performance Specification, 433-SPEC-0003,.

3.2.3.4.3 LAT Radiator Mounting

The LAT radiators shall be supported by both the LAT and the SC. The SC-LAT-radiator mount point location(s) on each radiator shall be negotiated and documented in the SC-LAT ICD. Each SC-LAT-radiator mount point shall allow complete translational freedom of movement in the plane of the radiator and complete rotational freedom of movement about the mount point.

The SC shall provide and install mounting brackets and mounting thermal isolation hardware for the SC-LAT-radiator mount points. The mounting brackets and mounting thermal isolation hardware shall be included in the SC mass budget. The SC contractor shall attach the radiators to the SC-LAT radiator mount points. The SC-LAT radiator mount points shall be designed to limit the conductive heat flow from the SC to each instrument radiator to <5 W, assuming that the SC temperature is at its maximum and that the instrument radiator temperature is -40 C.

3.2.3.4.4 LAT Radiator Field of View

The SC shall provide the LAT radiators with a clear field of view of 2π sr (in ±Y direction) except for the solar arrays (both sides). At all times following deployment, the view factor from each radiator to the solar arrays (both sides) shall be <0.10. Compliance with this requirement shall be demonstrated employing a TSS/TRASYS geometry model with sufficient nodalization to accurately calculate the subject view factor, such that the margin calculated in relation to the requirement is larger than the modeling error.

3.2.3.4.5 LAT Radiator IR Backload (IR Emitted by the Solar Arrays and Absorbed by the LAT Radiators)

The SC contractor shall configure the solar arrays such that the maximum orbit-average IR energy emitted by the solar arrays (both sides) that is absorbed by each radiator (including any multiple reflections of the emitted energy) is <75 W. Satisfaction of this heat load requirement shall be demonstrated using the thermal environmental parameters of 3.2.3.5, and LAT reference radiators with the following properties: CH-14

- Width: 1.85 m
- Height: 1.46 m
- Area: 2.7 m^2 (cutouts in the radiators for SC accommodation shall be ignored)
- Location of radiating surfaces: ±995 mm from the XZ-plane containing the observatory coordinate system origin; the maximum Z coordinate shall be contained within the LAT Interface Plane per Figure A-1.
- Radiator emissivity: 0.8
- Radiator solar absorbtivity: 0.24
- Orbital average radiator temperature (lumped radiator node): 0 C

3.2.3.4.6 LAT Radiator Direct Solar Loading

In addition to the above, the SC contractor shall meet the radiator direct absorbed solar heat load requirement as specified in the yaw steering requirement of the Spacecraft Performance Specification, 433-SPEC-0003. This yaw steering requirement shall also be used to determine the worst-case direct solar loads for pointed observations.

3.2.3.5 Thermal Environmental Parameters

Thermal design analyses shall use the environmental parameters of Table 3-3.

Table 3-3: Thermal Environmental Parameters

Thermal Flux Source	Hot Case	Cold Case
Solar Constant	1419 W/m^2	1286 W/m^2
Earth Albedo Factor	0.40	0.25
Earth IR	265 W/m^2	208 W/m^2

3.2.3.6 Thermal Models

3.2.3.6.1 General Thermal Model Requirements

Thermal Synthesizer System (TSS) geometry models and Systems Improved Numerical Differencing Analysis (SINDA) thermal models of the LAT and SC shall be used by the LAT engineers and the SC contractors for steady-state and transient thermal analyses.

The integration of these models is required in order to perform integrated Observatory thermal analyses. This model integration and the following Observatory thermal analyses shall be performed by the SC contractor.

For all models, design hot and cold case thermal models shall be maintained whose parameters bound thermal performance for all design cases. Worst case conditions include variations in orbit and environmental flux parameters, and a rational combination of the effects of design tolerances, fabrication uncertainties, analytical uncertainties, material differences, and degradation due to aging.

3.2.3.6.2 LAT Thermal Model Requirements

CH-16

The LAT IPO shall electronically deliver to the GSFC Project Office LAT thermal models. The GSFC Project Office shall electronically deliver these LAT thermal models (<9900 nodes) to the SC contractor as GFE. The need dates for these models shall be negotiated and documented in the SC-LAT ICD. These models are required so that the SC contractor can combine the LAT thermal model with a detailed SC thermal model to produce the Observatory thermal models used to generate preliminary flight/test predicts, correlations with Observatory-level thermal test results, and final flight predicts. CH-16

3.2.3.6.3 SC Solar Array Thermal Model Requirements

The SC contractor shall electronically deliver to the GSFC Project Office thermal models of the solar arrays as used in the Observatory thermal models. The GSFC Project Office shall electronically deliver these models to the LAT IPO as GFE. The need dates for these models shall be negotiated and documented in the SC-LAT ICD. These models shall be used as needed by the LAT to support their detailed instrument thermal

analyses. These models shall contain only public domain information with no restriction on their subsequent dissemination.

3.2.3.7 Thermal Test Requirements

Thermal/vacuum test environments for LAT and SC verification testing, as well as Observatory-level verification testing, shall be according to the LAT and SC MARs.

The SC MAR shall apply for Observatory-level verification testing.

During Observatory-level thermal vacuum testing, the LAT -X-axis shall be aligned with the gravity force vector and YZ-plane horizontal (i.e. “lying on its side”). The SC design shall accommodate simultaneous thermal verification with the LAT during Observatory testing.

3.2.4 ELECTRICAL

3.2.4.1 Power System

3.2.4.1.1 Average Power

3.2.4.1.1.1 LAT Average Power Consumed CH-15

On a per orbit average, the LAT shall consume less than 650 W.

Note: This includes operational and survival heater power in any combination. CH-01

3.2.4.1.1.2 Spacecraft Average Power Supplied

On a per orbit average, the spacecraft shall be capable of supplying at least 670W of power to the LAT. CH-15 CH-19

3.2.4.1.1.3 Spacecraft Power Regulator Unit (PRU) Capacity

On a per orbit average, the spacecraft PRU shall be capable of sourcing 750W of power.

3.2.4.1.2 Peak Power

The LAT shall consume no more than 750 W for less than a total of 10 minutes per orbit. This may take place at any time during an orbit and may take place in any number of intervals. This includes operational and survival heater power in any combination. CH-06 CH-18

3.2.4.1.2.1 SIU Peak Power

The LAT SIU shall consume less than 32 W.

3.2.4.1.2.2 VCHP Reservoir Heater Peak Power CH-06

The LAT VCHP reservoir heaters shall consume less than 58 W.

3.2.4.1.2.3 DAQ Peak Power

The LAT DAQ shall consume less than 668 W. CH-06

3.2.4.1.3 Voltage

3.2.4.1.3.1 Voltage Provided to the LAT

3.2.4.1.3.1.1 Regulated Voltage Provided to the LAT Electronics and VCHP Reservoir Heaters CH-06

The SC shall supply a regulated voltage within the range of 28 (±1) V at the LAT bulkhead connector interface for the LAT electronics and VCHP reservoir heaters.

CH-06

3.2.4.1.3.1.2 Unregulated Voltage Provided to the Survival Heaters

The SC shall supply an unregulated voltage within the range of 28 (+7, -3) V at the LAT bulkhead connector interface for the survival heaters exclusive of the VCHP reservoir heaters. CH-06

3.2.4.1.3.2 DC Voltage Tolerance CH-01

The LAT shall tolerate without damage or degradation DC voltages greater than 0 volts and less than 40.0 volts. CH-17

3.2.4.1.3.3 Voltage Transients

The LAT shall meet specification when subjected to voltage transients per CS116 requirements specified in the GLAST Satellite EMI Requirements Document, 433-RQMT-0005.

3.2.4.1.4 Current

CH-07

3.2.4.1.4.1 Over-current Protection

The SC shall protect itself from LAT shorts by providing over-current protection devices for each power connection to the LAT.

3.2.4.1.4.2 Current Transients

The LAT shall limit current transients as specified in the LAT-SC ICD. CH-07

3.2.4.1.5 Impedances

CH-07

3.2.4.1.5.1 Power Source Impedance

The SC PS output impedance, as measured at the SC cable which interfaces to the LAT, shall be as specified in the LAT-SC ICD. CH-07

3.2.4.1.5.2 LAT Power Input Impedance

The LAT power input filter shall present a symmetrical common mode and differential mode impedance to the power bus, as represented by the Alternating Current (AC) impedance of the differential mode and common mode input filters.

3.2.4.1.5.3 LAT Common Mode Impedance

The LAT common mode impedance shall be as specified in the LAT-SC ICD. CH-07

3.2.4.1.5.4 LAT Differential Mode Impedance

The LAT differential mode impedance shall be as specified in the LAT-SC ICD. CH-07

3.2.4.1.6 Operational Power Distribution

3.2.4.1.6.1 Definition of Feeds

The feeds shall be sized to supply a minimum of:

32W on Feed 1 for the Primary Spacecraft Interface Unit (SIU)

32W on Feed 2 for the Secondary SIU

668W on Feed 3 for the primary LAT Data Acquisition Unit (DAQ) CH-06

668W on Feed 4 for the secondary DAQ

58W on Feed 5 for the primary Variable Conductance Heat Pipe (VCHP) Reservoir Heater

58W on Feed 6 for the secondary VCHP Heater

3.2.4.1.6.2 Power Lines

The SC shall provide redundant switched power feeds and returns to the LAT.

3.2.4.1.6.3 Power Line Exclusivity

3.2.4.1.6.3.1 <u>DAQ Power Line Exclusivity</u>

The SC shall provide redundant DAQ services that are exclusive.

3.2.4.1.6.3.2 <u>Simultaneous Powering of the SIU Feeds</u> CH-06

The SC shall provide redundant feeds to the LAT SIU that are exclusive.

3.2.4.1.6.3.3 <u>Simultaneous Powering of the VCHP Reservoir Heater Feeds</u>

The SC shall provide redundant feeds to the LAT VCHP reservoir heaters that may be powered exclusively or simultaneously. CH-06

3.2.4.1.6.3.4 Simultaneous Operation of the VCHP Reservoir Heater Feeds

Both LAT SIUs shall be powered off whenever both sets of LAT VCHP reservoir heaters are operated simultaneously. CH-06

3.2.4.1.6.4 Toleration of Simultaneous Power on Redundant Lines

The LAT shall tolerate, without damage or degradation to itself or the SC, redundant power feeds that are active at the same time.

3.2.4.1.6.5 LAT Toleration of Power Interruption

The LAT shall tolerate instantaneous removal of power without damage or degradation to itself or the SC.

3.2.4.1.6.6 Independence of Power Feeds

Power feeds to the LAT shall not be connected together in any configuration by design or by a single fault in the LAT or SC for more than 10usec.

CH-06

3.2.4.1.6.7 No Common DC/DC Converters for the DAQ and VCHP Reservoir Heater Feeds

The VCHP reservoir heaters shall be powered by different DC/DC converters than those used to power the DAQ feeds.

3.2.4.1.7 Survival Heater Power

Survival heater power shall not be required to maintain LAT operational temperatures. CH-01

3.2.4.1.7.1 Redundant Survival Heaters

The LAT shall have redundant survival heaters.

3.2.4.1.7.2 Redundant Survival Heater Power Feeds

The SC shall provide redundant switched unregulated survival power feeds for the LAT sized to provide a minimum of:

8A on Feed 7 for Primary Survival Heaters

8A on Feed 8 for Primary Survival Heaters CH-06

8A on Feed 9 for Secondary Survival Heaters

8A on Feed 10 for Secondary Survival Heaters

3.2.4.1.7.3 Continuous Power to Survival Heaters

The SC shall be able to command simultaneous continuous power to all LAT Survival Heater Power Buses.

3.2.4.1.7.4 Survival Heater Isolation

The LAT shall electrically isolate survival heaters from each other and from chassis.

3.2.4.1.7.5 Intentionally Left Blank.

3.2.4.1.7.6 Survival Heater Power Consumption

3.2.4.1.7.6.1 LAT Grid and VCHP Anti-Freeze Survival Heater Orbit Average Power Consumption CH-06

The LAT grid and VCHP anti-freeze survival heater power combined shall not exceed an orbit average of 220 W.

3.2.4.1.7.6.2 VCHP Reservoir Survival Heater Orbit Average Power Consumption

The VCHP reservoir survival heater power shall not exceed an orbit average of 58 W.

3.2.4.1.7.6.3 LAT Grid and VCHP Anti-Freeze Survival Heater Orbit Peak Power Consumption

The LAT grid and VCHP anti-freeze peak survival heater power combined shall not exceed a maximum of 560 W.

CH-06

3.2.4.1.7.6.4 VCHP Reservoir Survival Heater Peak Power Consumption

The VCHP reservoir survival heater power shall not exceed a maximum of 58 W.

3.2.4.1.7.6.5 Use of LAT Grid and VCHP Anti-freeze Survival Power Feeds

The LAT grid and VCHP anti-freeze survival power shall be used only for heaters and associated passive control circuitry that maintain the LAT at a minimum turn-on temperature.

3.2.4.1.7.6.6 Use of VCHP Reservoir Heater Power Feeds for Survival

The operational power feeds for the VCHP reservoir heaters shall be available for survival power.

3.2.4.1.7.7 Survival Heater Power Control

The SC shall provide flight software and ground-commandable hardware interfaces to independently turn power on and off to each of the four unregulated survival heater power feeds. The SC shall normally operate such that only one feed is powered for each survival heater. The LAT shall passively control the manner by which the unregulated survival heater circuit is closed. CH-06 CH-06

3.2.4.1.7.8 Voltage for Grid and Variable Conductance Heat Pipe Anti-Freeze Heater Sizing

CH-06

The LAT grid and Variable Conductance Heat Pipe anti-freeze survival heaters shall be sized for an input voltages between 25V and 35V.

3.2.4.1.8 Isolation

The LAT shall provide secondary power converters that isolate secondary from primary power returns by > 10 MΩ at Direct Current (DC). CH-07

3.2.4.2 Grounding

Detailed grounding requirements shall be met as documented in the GLAST Satellite EMI Requirements Document, 433-RQMT-0005.

3.2.4.3 Electromagnetic Interference / Compatibility (EMI / EMC)

Detailed EMI/EMC requirements shall be met as documented in the GLAST Satellite EMI Requirements Document, 433-RQMT-0005.

Assuming a zero input from the Earth's magnetic field, the SC shall not generate a magnetic field larger than 2 gauss within the volume defined by the projection in the +Z direction of the area lying between a 1564 mm x 1564 mm square contained within the LIP (the LIP is defined per Figure A-1) and centered on the LAT centerline, and a 1668 mm x 1668 mm square also contained within the LIP and centered on the LAT centerline.

3.2.4.4 LAT Harness

The SC shall provide fully assembled LAT interface cables with mating connectors. The mass of the LAT interface cables shall be part of the SC mass budget.

3.2.4.5 Command and Data Handling (C&DH) Interfaces

This section describes the physical interface requirements for the spacecraft C&DH services, which include the science data, command and telemetry, time mark and frequency and any discrete interfaces.

3.2.4.5.1 Interface Conductors

Signal conductors shall use paired conductors. Paired conductors may include twisted pair, coaxial, twin axial, dual coaxial, and triaxial types. CH-08

3.2.4.5.2 Interface Circuitry Isolation

The interface circuitry isolation shall be as specified in the LAT-SC ICD. CH-07

3.2.4.5.3 Physical Characteristics of Interface Signals

Physical characteristics of interface signals shall be as shown in the LAT-SC ICD. CH-08

3.2.4.6 Test Point Interfaces

The SC or LAT may elect to use test points to provide external access to internal circuitry via Ground Support Equipment (GSE). Use of test points shall meet the following requirements.

3.2.4.6.1 SC Integration and Test Use

Test points shall not be used during SC integration and test, except as expressly approved and documented in formal procedures.

3.2.4.6.2 Performance Verification Limit

Data collected to verify acceptance or qualification of performance requirements shall be acquired through flight interfaces and not through test point interfaces.

3.2.4.6.3 Keyed Connectors

All test points shall be brought out to a separate, keyed connector(s), which shall be easily accessible.

When the LAT is integrated to the SC, any LAT to SC connector on the LAT side shall be mated and de-mated without requiring any other LAT to SC connector to be de-mated. Any exceptions to the prior statement must first be presented to the Project Office on a case-by-case basis and then receive authorization.

Separate test connectors shall be used to segregate classes of signals.

When not in use and prior to launch, the connectors shall be protected with flight-qualified covers.

3.2.4.6.4 Internal Cable Access

The LAT shall be mated and de-mated to the SC without de-mating LAT internal cables.

3.2.4.6.5 Ground Test Connector Access

The LAT ground test connector(s) shall be easily accessible with the LAT mounted to the SC.

3.2.4.6.6 Power and Load Isolation

The Observatory shall not be powered through, nor significantly loaded, by test point interface circuitry, including connection to external GSE.

3.2.4.6.7 Failure Propagation

Test point interface circuitry shall not propagate failures to flight circuitry. This includes credible failures in GSE connected externally to the test point interface connectors.

3.2.4.6.8 Short-Circuit Isolation

Test point short-circuit isolation shall also be provided. The Observatory shall operate within specification in the event any test point is shorted to the power bus, ground, or another test point, and upon removal of the short.

3.2.4.6.9 Grounding Integrity

Test point interface circuitry shall not compromise grounding requirements, either by design or use.

3.2.4.6.10 Flight Standards

Test points shall be designed and implemented in accordance with all applicable flight standards and component ratings.

3.2.4.6.11 Test Point Documentation

Test point interfaces, functions and GSE interconnection shall be negotiated and documented in the SC-LAT ICD.

3.2.5 COMMAND AND DATA HANDLING

3.2.5.1 Command, Telemetry, and Data Bus (CTDB)

3.2.5.1.1 CTDB Specification

Commands, telemetry, time messages, and ancillary data shall be transferred between the LAT and the SC via a serial CTDB compliant with MIL-STD-1553B.

3.2.5.1.2 CTDB Protocol

The CTDB shall utilize the communications protocol at the physical layer as defined by MIL-STD-1553B.

3.2.5.2 Time Support

3.2.5.2.1 Pulse Per Second (PPS) Bus

The SC shall provide to the LAT, across an LVDS interface, a 1PPS signal accurate to $\pm$1.5 μsec when GPS provides the timing signal. CH-03

3.2.5.2.2 GPS Receiver Time Dropout

The PPS signal shall be provided without interruption to the LAT in the event of a loss of the time signal provided by the GPS receiver.

3.2.5.2.3 PPS Signal Drift

The 1 PPS signal shall not drift more than $\pm$ 1μsec over 100 seconds. CH-02

3.2.5.2.4 Spacecraft to Instrument Interface Simulator (SIIS)

The SIIS shall provide a 1 PPS signal with the accuracy and drift specified in 3.2.5.2.1 and 3.2.5.2.3. CH-10

3.2.5.3 Control and Monitoring

3.2.5.3.1 Analog Signals

The SC shall provide 96 primary and 96 redundant analog signals, which allow the SC to monitor LAT health and safety against a set of defined limits. The LAT shall provide and install all associated sensors and wiring that attach to the LAT.

3.2.5.3.2 Analog Signal Sampling

CH-08

3.2.5.3.2.1 Analog Sampling Rate

The instrument analog signals shall be sampled at a rate not to exceed 5 Hz.

3.2.5.3.2.2 Analog Sample Reporting

The instrument analog data shall be included in housekeeping telemetry at a rate between 0.01 Hz and 5 Hz. CH-08

3.2.5.3.2.3 Analog Sampling Resolution

The instrument analog signals shall be sampled at a resolution not to exceed 12 bits.

3.2.5.3.3 Discrete Control Signals

The SC shall provide 8 primary and 8 redundant discrete LVDS signals for configuration and power control of the LAT. The LAT shall provide and install all associated actuators and wiring that attach to the LAT. Each set of primary and redundant signals shall be 2 pulse and 6 levels. CH-05

3.2.5.3.4 Discrete Monitor Signals

The SC shall provide 4 primary and 4 redundant discrete LVDS monitor lines for monitoring configuration status of the LAT. The LAT shall provide and install all associated sensors and wiring that attach to the LAT. All discrete monitor signals shall be level. CH-05

3.2.5.4 LAT to SC Science Data Interface

3.2.5.4.1 LAT to SC Interface Data Rate

The LAT-SC total aggregate data rate on the dedicated science data interface shall accommodate data throughput up to 48 Mbps. CH-02, CH-16

3.2.5.4.2 LAT to SC Interface Transmitters and Receivers

The LAT-SC interface transmitters and receivers shall use LVDS drivers and receivers compatible with IEEE 1596.3SCI LVDS and be compatible with ANSI/TIA/EIA 644-1996 LVDS standards.

Note: High level protocols such as IEEE-1355 and IEEE-1394 are not acceptable implementations of this interface. The details of the protocol will be defined in the LAT-SC ICD. CH-02

3.2.5.4.3 Maximum Signal Frequency

The maximum signal frequency of any one interface signal shall be 6 MHz for an 8 bit bus. CH-02, CH-16

3.2.5.4.4 LAT to SC Interface Configuration

The LAT-SC interface shall have 1 instrument provided clock signal, 8 data bits, and 1 instrument provided data valid signal from the LAT to the SC. The interface shall also include one 'Ready' line from the SC to the LAT, indicating that the SC is ready to receive data. CH-02

3.2.5.4.5 Data Volume

The LAT shall provide to the SC a maximum of 104 gigabits of high rate science data in any given 24 hour period. CH-13

Note: This allocation also includes a total source packet overhead of 112 bits per packet (64 bits of the secondary header are for a time stamp).

3.2.5.4.6 Packet Format

All LAT science data transferred over the high rate bus shall be CCSDS Source Packets as defined in the Packet Telemetry Blue Book.

3.2.5.4.7 CCSDS Packet Synchronization Marker

Each CCSDS Source Packet shall have a 32-bit sync pattern pre-pended to the packet.

Note: This sync pattern facilitates subsequent data packet reconstruction. CH-03

3.2.5.4.8 Science Data Interface Redundancy

The science data interface shall provide cross-strapping redundancy between the spacecraft and the instrument. (ie. Both Side A and Side B of the instrument interface to both Side A and Side B of the spacecraft.)

3.2.6 SOFTWARE / DATA

3.2.6.1 Commands

3.2.6.1.1 CTDB (1553) Commands

All 1553 commands issued by the SC to the LAT shall be documented in the SC-LAT ICD.

3.2.6.1.1.1 LAT Object Loads

The LAT shall accept and load objects (software and data) from commands issued by the SC from ground command. The format and content of the Object Loads will be documented in the SC-LAT ICD.

3.2.6.1.1.2 LAT Configuration Commands

The LAT shall be configurable by commands issued by the SC.

Note: The LAT may also internally configure itself, reporting its configuration via telemetry

3.2.6.1.2 LAT Real-Time Command Frequency

The SC shall transmit real-time commands to the LAT across the CTDB at a rate of up to 20 commands per second. CH-03

3.2.6.2 Telemetry

3.2.6.2.1 CTDB (1553) Telemetry

All 1553 telemetry packets from the LAT to the SC shall be documented in the SC-LAT ICD.

3.2.6.2.2 LAT Housekeeping Data

The LAT shall provide the SC a housekeeping data set as defined in the SC-LAT ICD.

3.2.6.2.3 Application Identifier (APID) Allocation

The LAT shall utilize APIDs as defined in the SC-LAT ICD.

3.2.6.2.4 LAT Science Data Subset

The LAT shall provide a defined subset of science data to be included in a unique APID as defined in the SC-LAT ICD.

3.2.6.2.5 LAT Object Dumps

The LAT shall dump Object contents (software and data) by command. The format and content of the Object Dumps will be documented in the SC-LAT ICD.

3.2.6.2.6 Instrument Health and Safety Monitoring

The SC shall monitor LAT housekeeping telemetry (analogs and discretes, not 1553 housekeeping packets) to allow the verification of LAT health and safety out of limit conditions.

3.2.6.3 Time Messages

3.2.6.3.1 Distribution Format

The SC shall issue to the LAT, a time message that gives a “time at the tone will be” message in Global Positioning System (GPS) format.

3.2.6.3.2 Distribution Timing

The Time Mark Message shall be issued between 500 ms and 800 ms before the transition of the 1 PPS time mark signal.

3.2.6.4 Ancillary Data

The SC shall provide an ancillary data packet to the LAT at a rate no more frequent than the SC GNC attitude control loop rate.

3.2.6.4.1 Ancillary Data Packet

The ancillary data packet shall contain data as specified in the LAT-SC ICD. CH-07

3.2.6.5 Transient Event Data Reporting

The LAT plays a role in transient events detected by either the LAT or the GBM.

3.2.6.5.1 LAT-detected Transient Event Data Reporting

3.2.6.5.1.1 LAT generated Burst Alert Telemetry

For each detected burst, the LAT shall send alert telemetry to the SC on the 1553 bus for immediate transmission to the ground. CH-07

3.2.6.5.1.2 Autonomous Repoint Request Telecommand

When a detected burst meets a LAT determined criteria, the LAT shall issue an Autonomous Repoint Request (ARR) telecommand to the SC. CH-07

3.2.6.5.1.3 Autonomous Repoint Request Response

The SC shall always inform the LAT as to whether or not the SC did accept and process the repointing request.

3.2.6.5.1.4 Telecommands to the GBM

For each detected burst, the LAT shall send telecommands to the GBM as defined in the LAT-GBM ICD. CH-07

3.2.6.5.2 GBM-detected Transient Event Data Reporting

For GBM detected Transient Events, the LAT receives the following information.

CH-07

3.2.6.5.2.1 Immediate Trigger Signal

The LAT receives a single pulse from the GBM for each burst detected by the GBM as described in section 3.2.7. CH-03

3.2.6.5.2.2 GBM Telecommands to LAT CH-07

For each burst event detected by the GBM, the LAT shall receive, a series of telecommands across the 1553 bus as defined in the LAT-GBM ICD. CH-07

3.2.6.6 SAA Entry / Exit Messages

The SC shall notify the LAT of SAA Entry and SAA Exit. The timeliness and contents of the message shall be negotiated and documented in the SC-LAT ICD.

3.2.7 IMMEDIATE TRIGGER SIGNAL

CH-07

The LAT shall receive a burst trigger signal routed from the GBM across an LVDS interface via the SC harness.

3.2.7.1 Immediate Trigger Signal Frequency

The Immediate Trigger Signal shall occur at a rate defined in the LAT-GBM ICD.

3.2.7.2 Immediate Trigger Signal Characteristics

CH-07

The Immediate Trigger Signal characteristics shall be defined in the LAT-GBM ICD.

3.2.7.3 Reserved

Requirement Deleted.

CH-07

3.2.7.4 Immediate Trigger Signal Redundancy

The Trigger Signal interface shall provide cross-strapping redundancy between the GBM and the LAT. (i.e. Both Side A and Side B of the GBM interface to both Side A and Side B of the LAT.) CH-04

3.2.8 FAULT PROTECTION

3.2.8.1 Fault Tolerance

SC and LAT systems and interfaces shall be single-fault tolerant, as specified in the Mission System Specification, 433-SPEC-0001.

3.2.8.2 Safe Mode Notification

The SC shall notify the LAT across the CTDB when entering safe mode. CH-08

3.2.8.3 Load Shedding

3.2.8.3.1 Load Shedding Causes

LAT power shall be disconnected when ground-based or on-board fault analysis determines load shedding is required.

3.2.8.3.2 Load Shedding Notification

The SC shall send a message to the LAT across the CTDB no less than 15 seconds prior to issuing a command to disconnect LAT power.

3.2.8.4 Instrument Protection

The SC shall take corrective action to protect the LAT in the event LAT telemetry (per 3.2.6.2.6) indicates out-of-limit conditions.

4 APPENDIX A: LAT INSTRUMENT STAY CLEAR DRAWING.

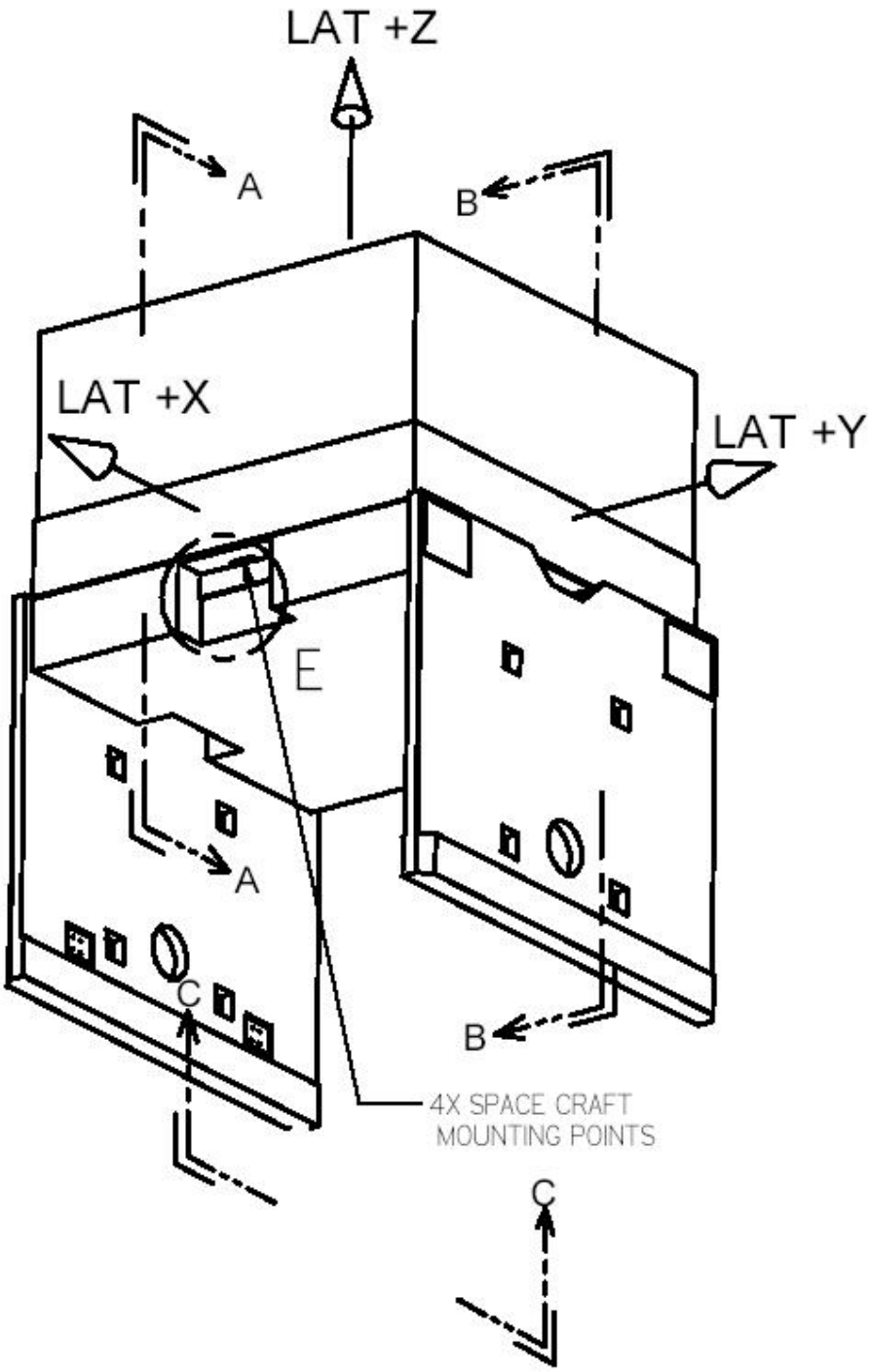

CH-11

Figure A-1 (1 of 6): Instrument Isometric

CH-12

Notes:

1. Dimensions are in mm's and apply at 22˚C. CH-11

2. Coordinate system referenced is the LAT coordinate system.

3. The dimensions shown are stay-clear dimensions of the LAT flight instrument. These dimensions are static, and may be exceeded by the instrument under load. Additional volume may be needed to accommodate instrument access for integration, surveying, testing, GSE, and servicing. These accommodations are not shown on this drawing, and are documented in the LAT-SC ICD. CH-11

4. The 2718.0 mm diameter stay-clear circle (View C-C) provides, at any point on its circumference, 12.5 mm of clearance to the launch vehicle fairing static design envelope.

5. Bolt and pin details for the spacecraft mounting points at the primary structural interface and the radiator interface are for illustration only. The LAT-SC ICD is the controlling document for these details. CH-11, CH-12

6. Figures are not to scale.

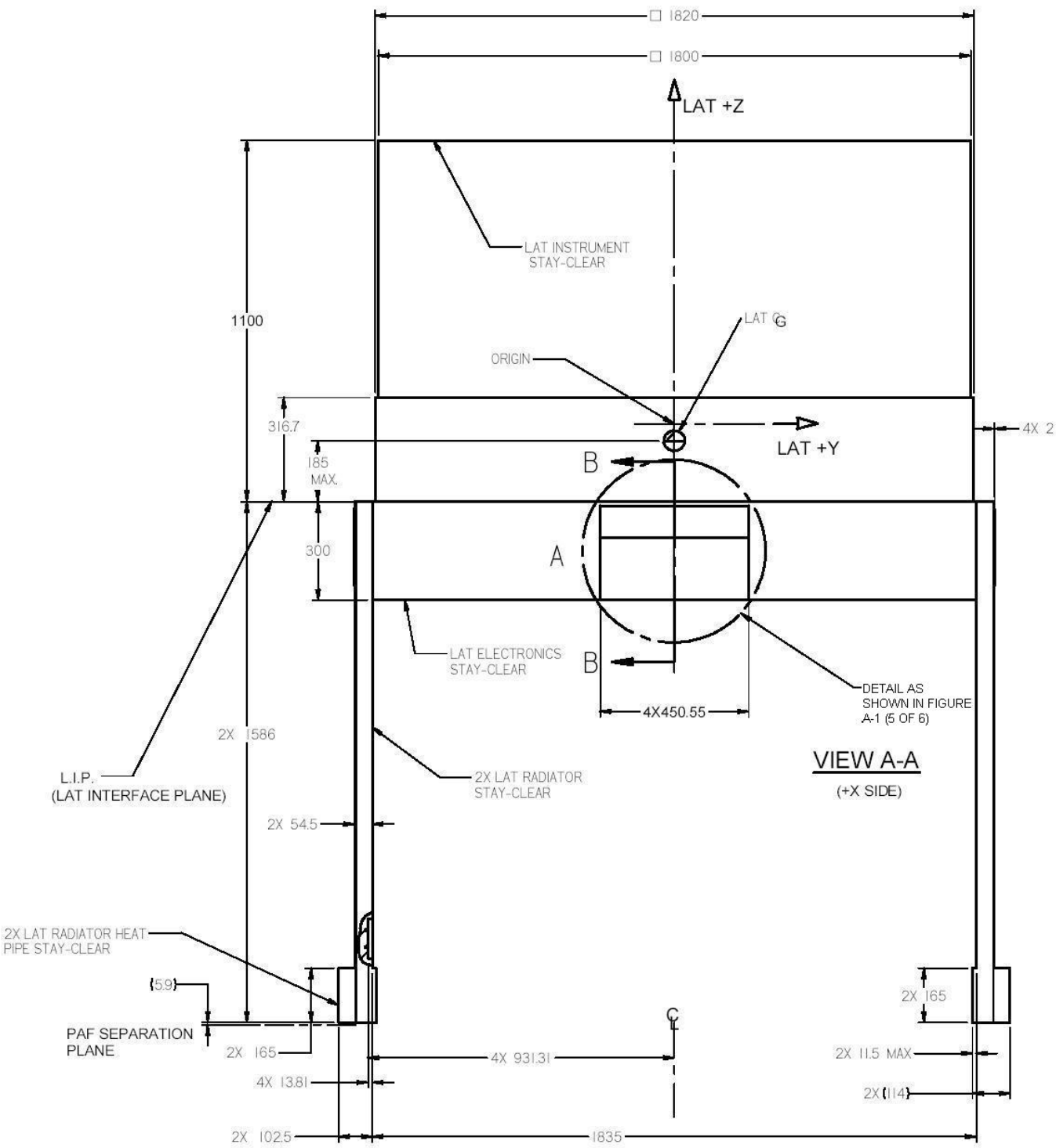

CH-11

CH-12

Figure A-1 (2 of 6): View A-A

CH-12

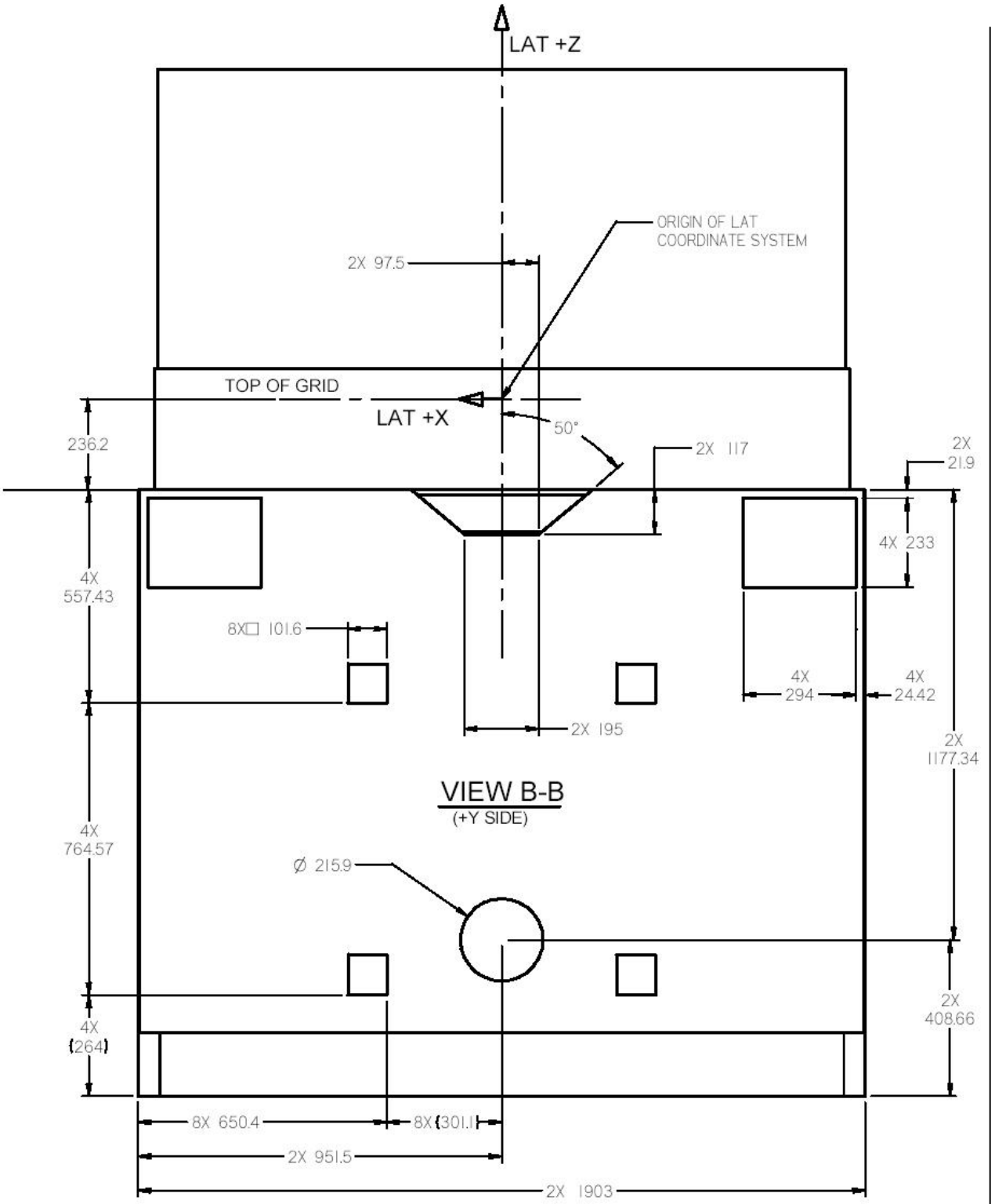

CH-11

Figure A-1 (3 of 6): View B-B

CH-12

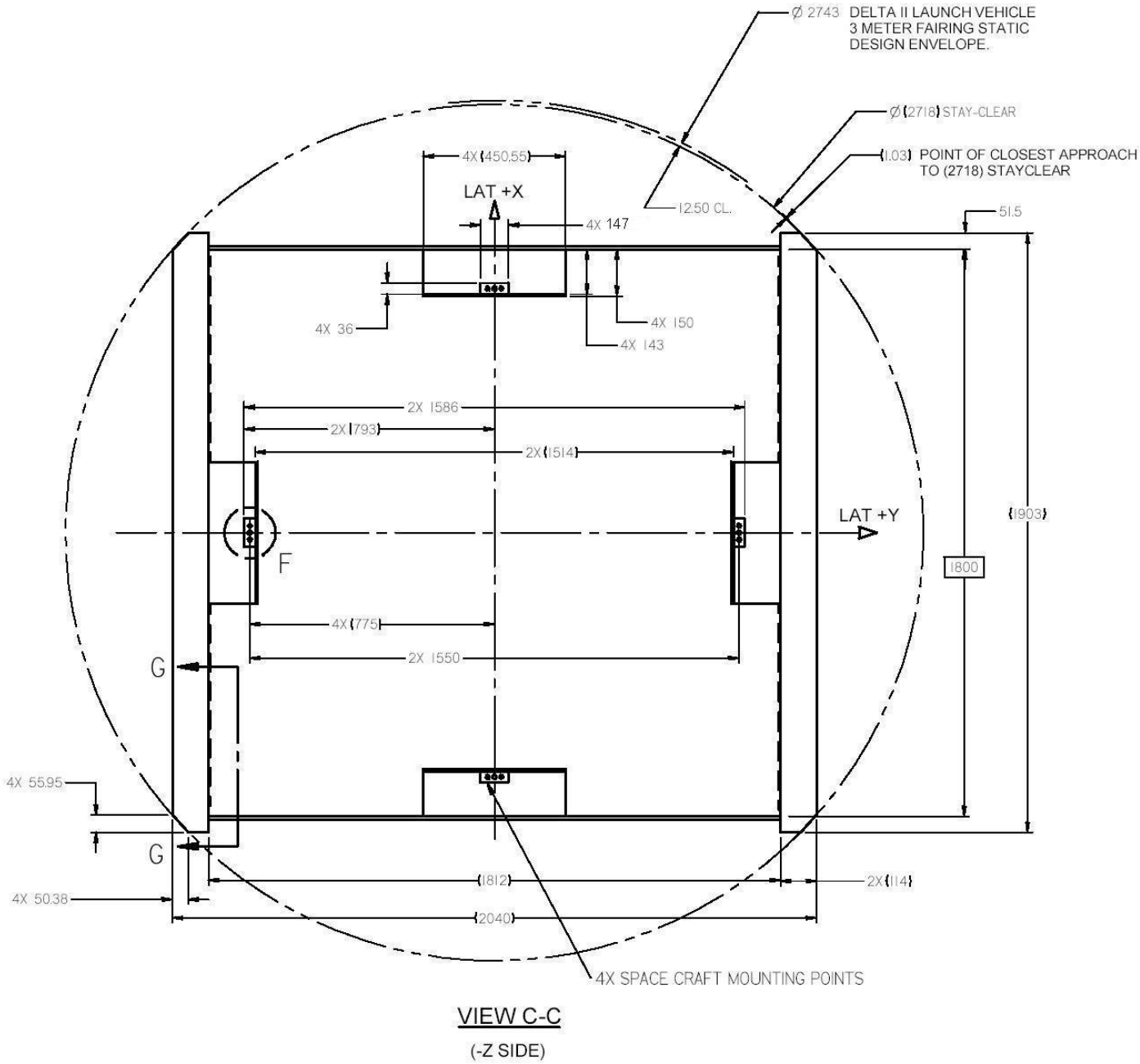

CH-11

Figure A-1 (4 of 6): View C-C

CH-12

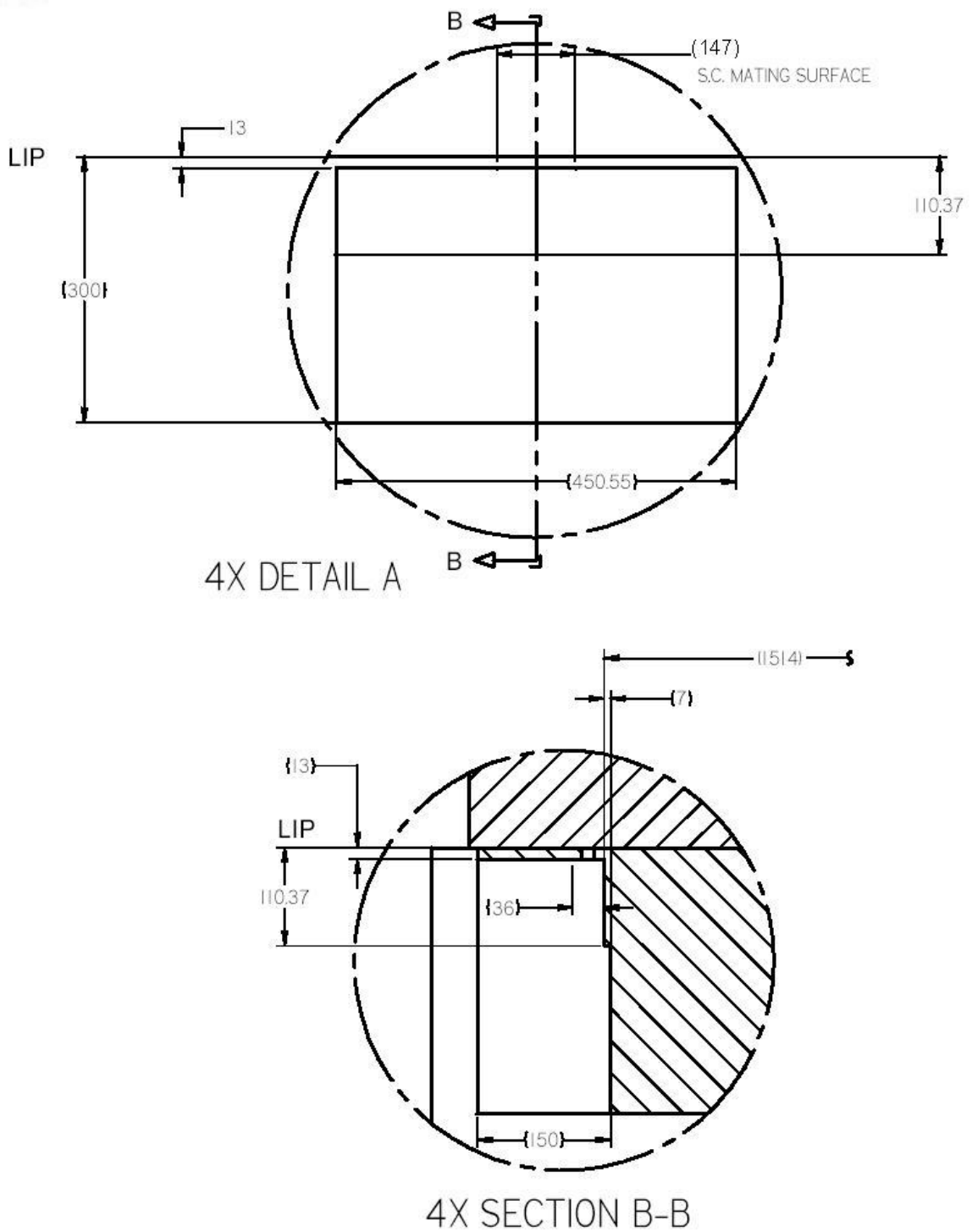

CH-11

Figure A-1 (5 of 6): View B-B (detail)

CH-12

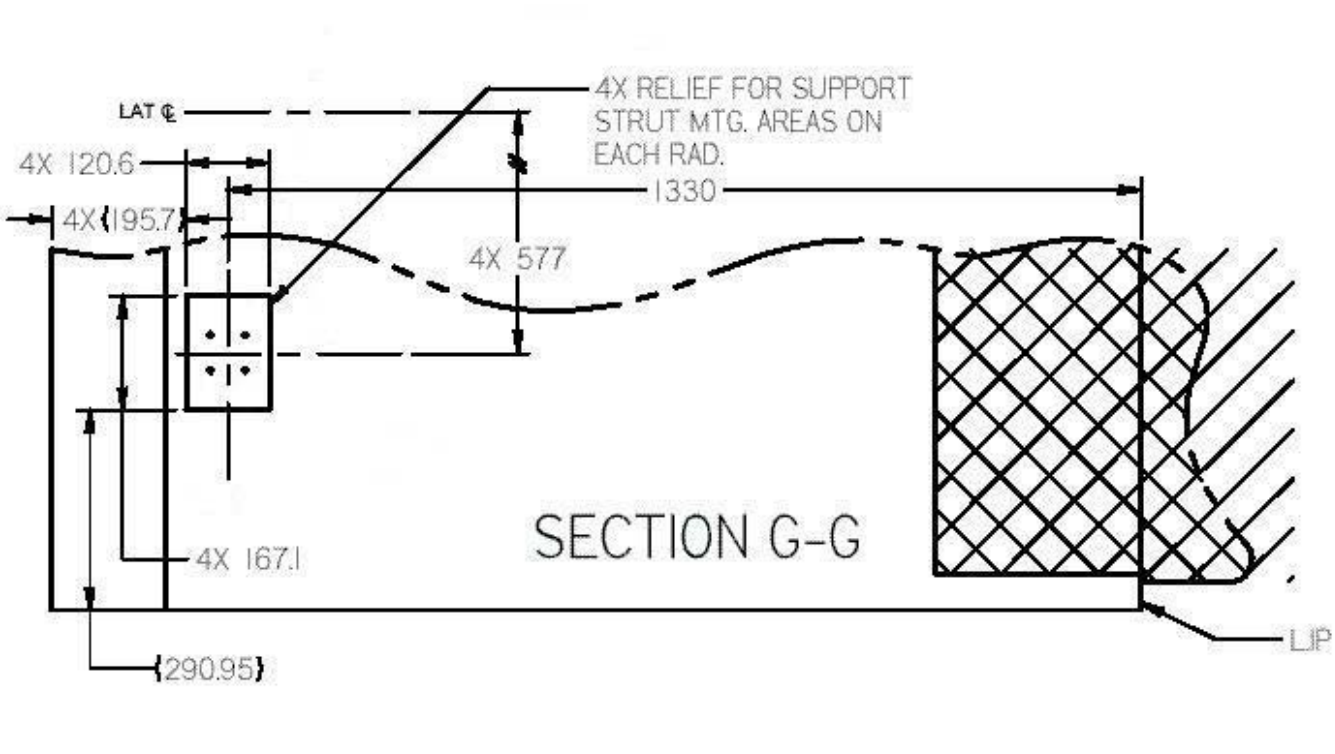

CH-12

Figure A-1 (6 of 6): View G-G (detail)

CH-12